ACAD CODE:	GSK−144M

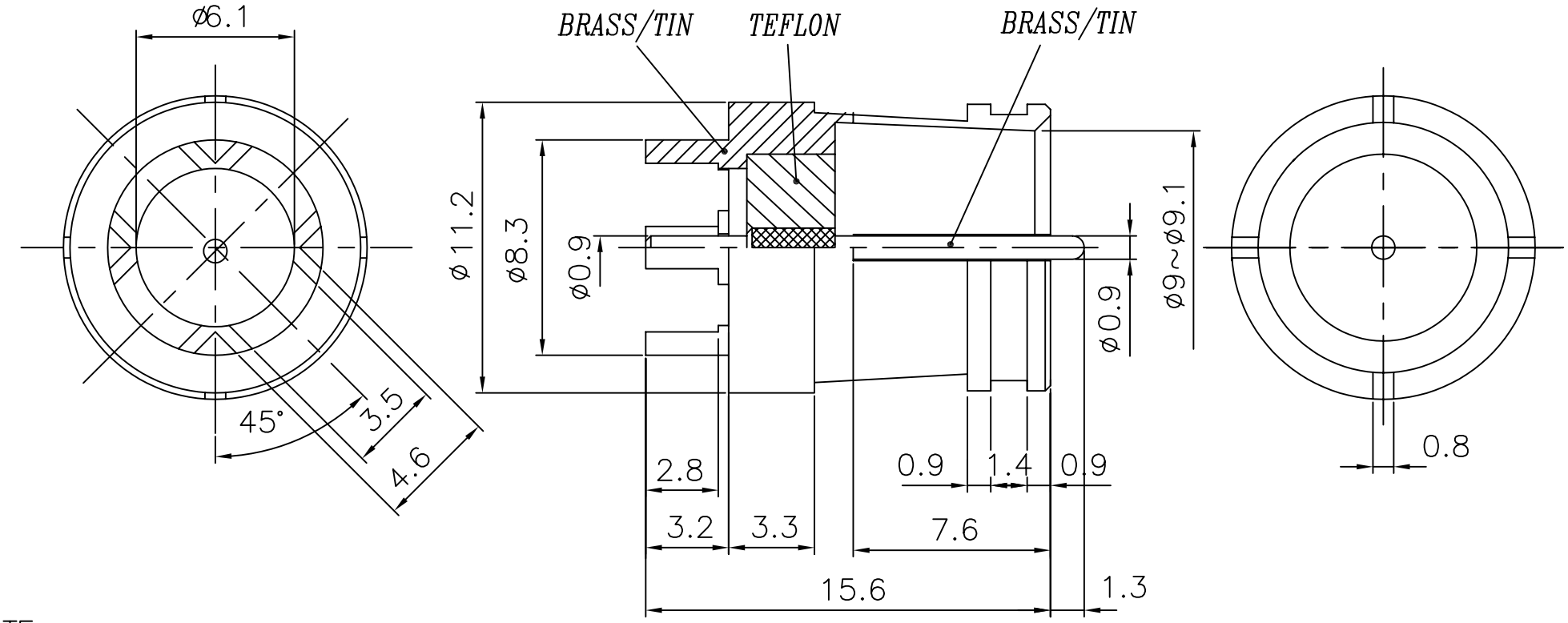

NOTE:

MANUFACTURE CODE: JHPP0365

NO.	DESCRIPTION	Q'TY	MATERIAL

viswar VISWAR TECHNOLOGIES

NAME	GSK−144M
DWG NO	
單位 UNIT	MM
SCALE	NONE
SHEET	1 / 1
TOLERANCE .X	±0.25
.XX	
.XXX	
ANGLES	
DRAW. BY	AXL
CHECKED	
APPVL. BY	

REV	DESCRIPTION	DATE	NAME	ECN NO.
A	ISSUED	9/13/07'	AXL	