ACAD CODE:	GSK-424

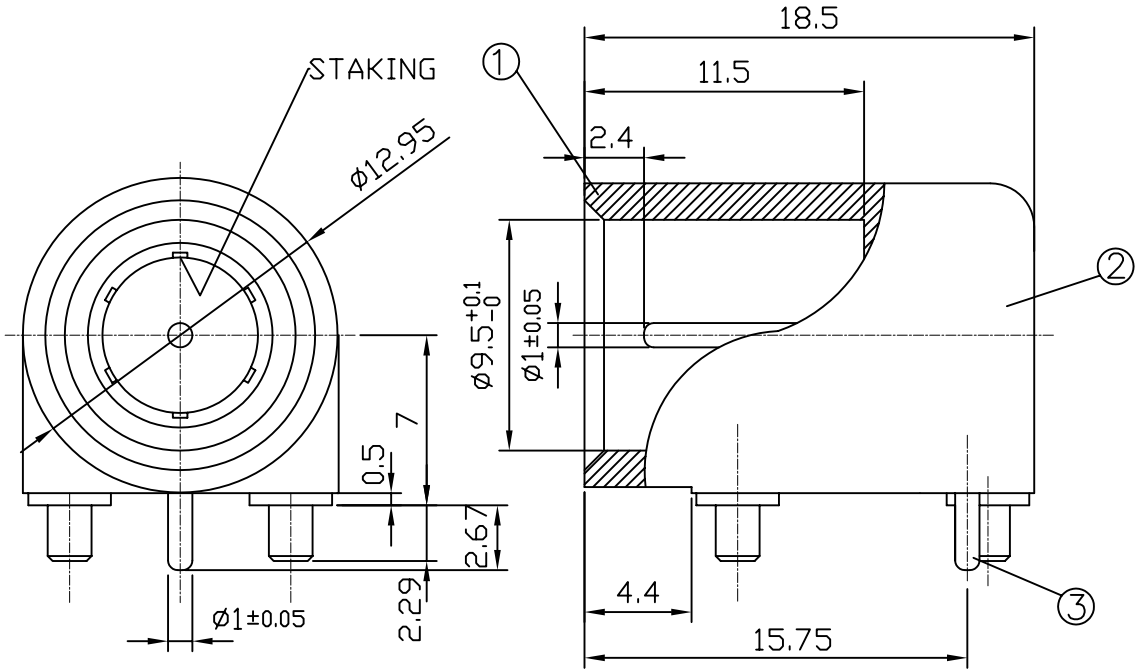

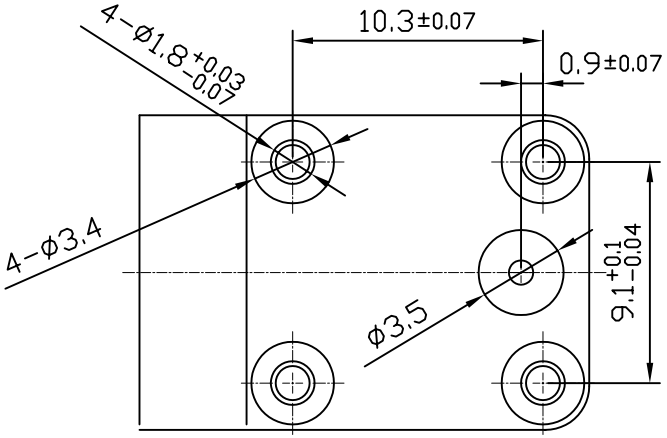

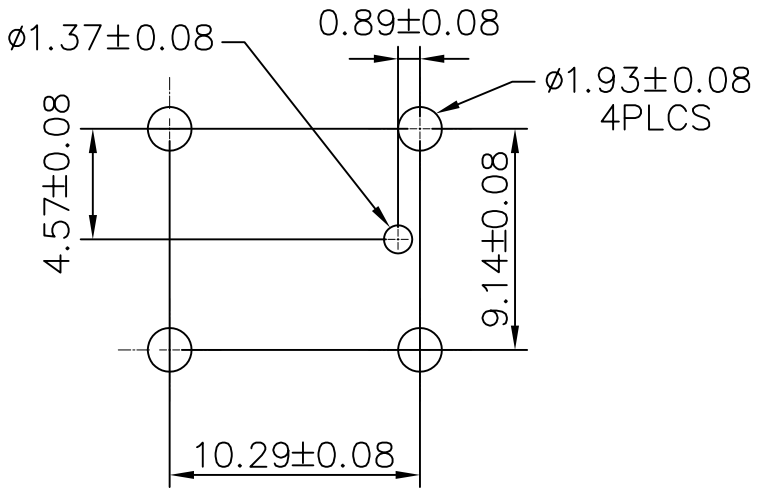

PCB CONFIGURATION

NOTE:
1. BRASS PER ASTM-B-16.
2. ZINC PER QQ-Z-363.
3. TIN PLATE PER ASTM-B-545.
4. TEST JACK INSERTION DEPTH TO BE .450 IN.
5. RoHS COMPLIANT.

	NO.	DESCRIPTION	Q'TY	MATERIAL	PLATED
B	3	CONTACT	1	BRONZE	GOLD 1u"
	2	DIELECTRIC	1	PP	
B	1	SHELL	1	Zinc#3	SULFMATE 1.5um

viswar a Genesis Electro-Mechanical Company VISWAR TECHNOLOGIES

圖名 NAME	G CONN, R/A, PCB TYPE
圖號 DWG NO	GSK-424
單位 UNIT	MM
比例 SCALE	NONE
SHEET	1 / 1
一般公差 .X .XX ±0.1 .XXX ANGLES	
繪圖 DRAW. BY	AXL
校對 CHECKED	
審核 APPVL. BY	

REV	DESCRIPTION	DATE	NAME	ECN NO.
B	CHANGE PLATING SHELL WAS TIN 3.81um CONTACT WAS TIN 3.81um.	11/30/07'	AXL	
A	*ISSUED*	11/9/07'	AXL	