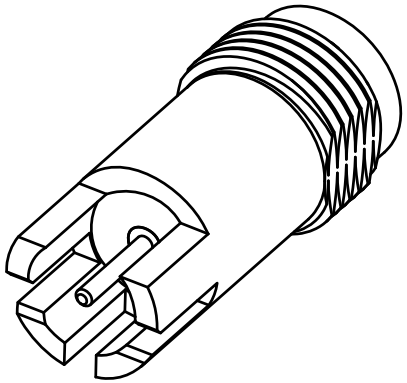

NOTES:
1.IMPEDANCE: 50Ω
2.VOLTAGE RATING: 500V(RMS)
3.FREQUENCY RANGE: 0~11GHz
4.DIELECTRIC WITHSTANDING VOLTAGE: 1500V
5.CONTACT RESISTANCE: CENTER CONTACT ≤1.5mΩ
OUTER CONTACT ≤0.5mΩ
6.INSULATION RESISTANCE ≥5000MΩ
7.INSERTION LOSS: ACCORDING AS THE CABLE
8.DURABILITY: 500CYCLES MINIMUM
9.TEMPERATURE RANGE: −55°C~+125°C

COMPLIANCE WITH RoHS

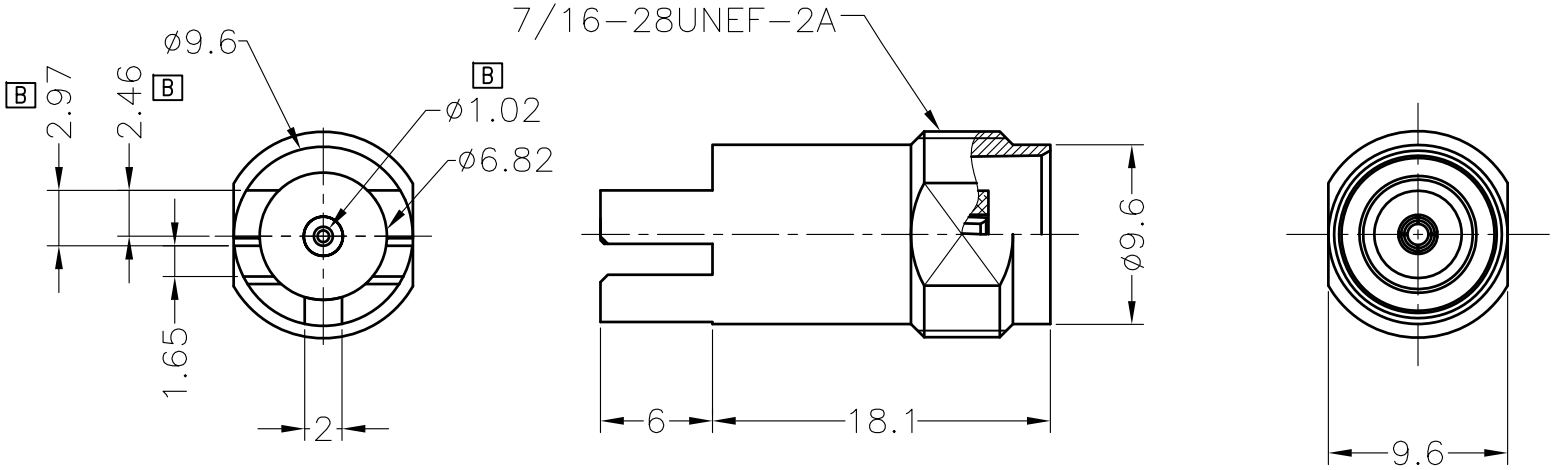

NO.	PART NAME	MATERIAL	PLATING & COLOR
C	INSULATOR	TEFLON MIL-P-19468	N/A
B	CONTACT PIN	BE-CU C17300	GOLD 10μ"/NICKEL /COPPER
A	BODY	BRASS C3604	NICKEL 100μ"/COPPER

REV	ECN NO.	NAME	DATE
B	MODIFY DIM.	Kevin	01/20/10'
A	ISSUED	Hanson	10/22/09'

TOLERANCE	
LINEAR	ANGLES
X.±0.38	X°.±5°
.X±0.25	.X°±3°
.XX±0.15	.XX°±
.XXX±	.XXX°±

GENESIS TECHNOLOGY, INC
7F, No. 191, Sec. 2 Chung-Yang Rd., Tu-Cheng City Taipei Hsien, Taiwan

APPD:	MAT'L:
CHKD:	FINISH:
DRWN:	Q'TY:

TITLE: TNC FEMALE CONNECTOR

PART NO.	GTI09−20120
DWG NO.	GTI09−20120

UNITS	SCALE	SHEET	REV
MM	NONE	1 OF 1	B