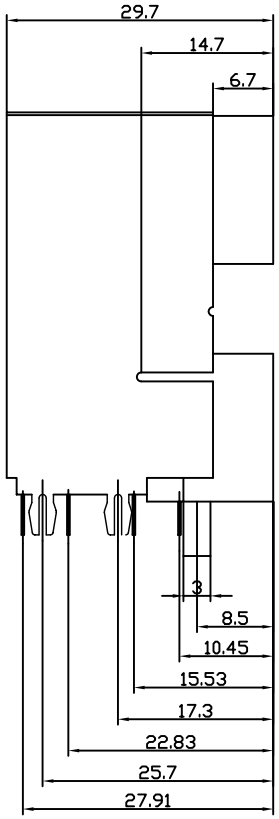

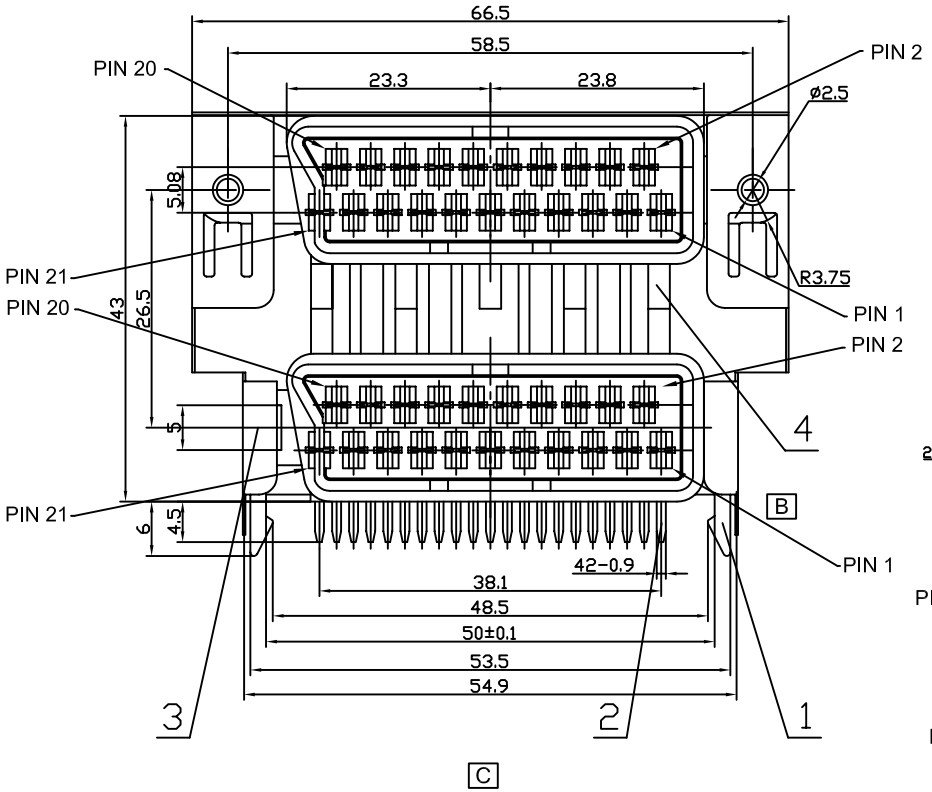

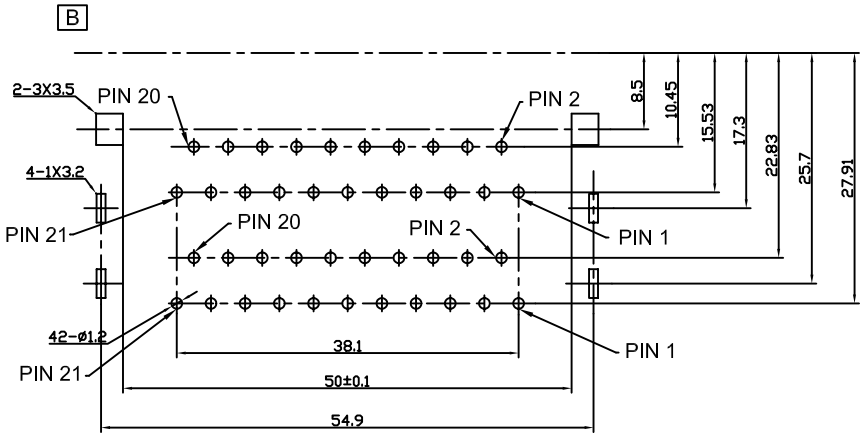

PCS LAYOUT COMPONENT SIDE VIEW

Tolerance:±0.05mm

NOTES
1. RoHs Compliant.

B	No	Name	QTY	Material	Plating
	4	Base(2)	1	PC (Black)	———
	3	Shield Patch	1	Iron t=0.3	CuSn
	2	Contact Piece	42	QSn6.5-0.1 t=0.3	CuSn
	1	Base(1)	1	PC (Black)	———

REV	ECN NO.	NAME	DATE
C	UPDATED DRAWING	FOX	7/23/09'
B	REVISE DRAWING ACCORDING TO EXISTING	AXL	12/20/05'
A	ISSUED	AXL	12/13/05'

TOLERANCE	
LINEAR	ANGLES
X.±	X°.±
X< 6 ± 0.2	.X°±
6 ≤X< 20 ± 0.3	.XX°±
X≥ 20 ± 0.4	.XXX°±

GENESIS TECHNOLOGY, INC
a Genesis Electro-Mechanical Company
1015 GRANT STREET S.E.
ATLANTA, GA 30315

APPD:
CHKD:
DRWN: AXL
MAT'L:
FINISH:
Q'TY:

TITLE: SCART STACKED DIP TYPE

PART NO. SCT-103R

DWG NO. SC-10215

UNITS	SCALE	SHEET	REV
MM	NONE	1 OF 1	C